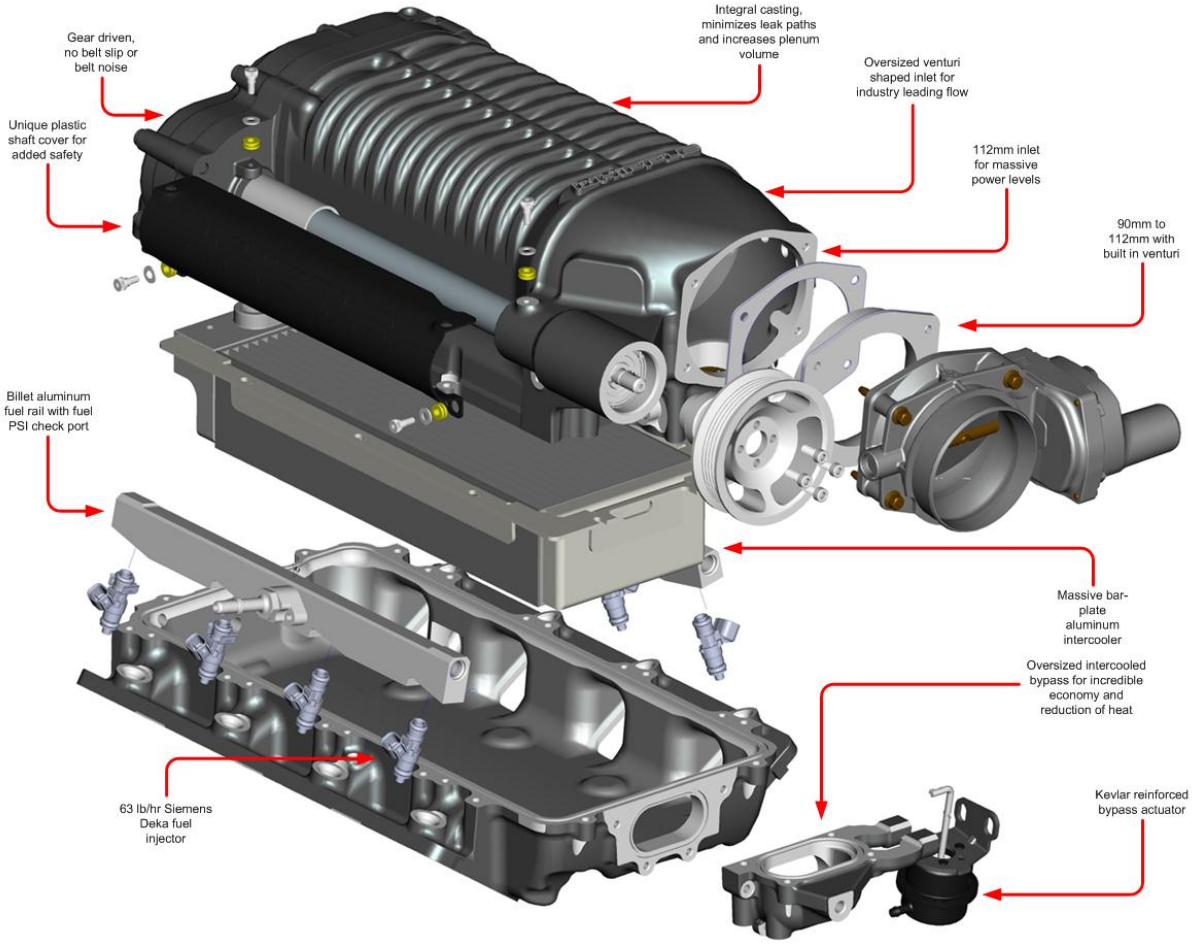
Gear driven, no belt slip or belt noise
Integral casting, minimizes leak paths and increases plenum volume
Oversized venturi shaped inlet for industry leading flow
Unique plastic shaft cover for added safety
112mm inlet for massive power levels
90mm to 112mm with built in venturi
Billet aluminum fuel rail with fuel PSI check port
Massive bar-plate aluminum intercooler
Oversized intercooled bypass for incredible economy and reduction of heat
63 lb/hr Siemens Deka fuel injector
Kevlar reinforced bypass actuator

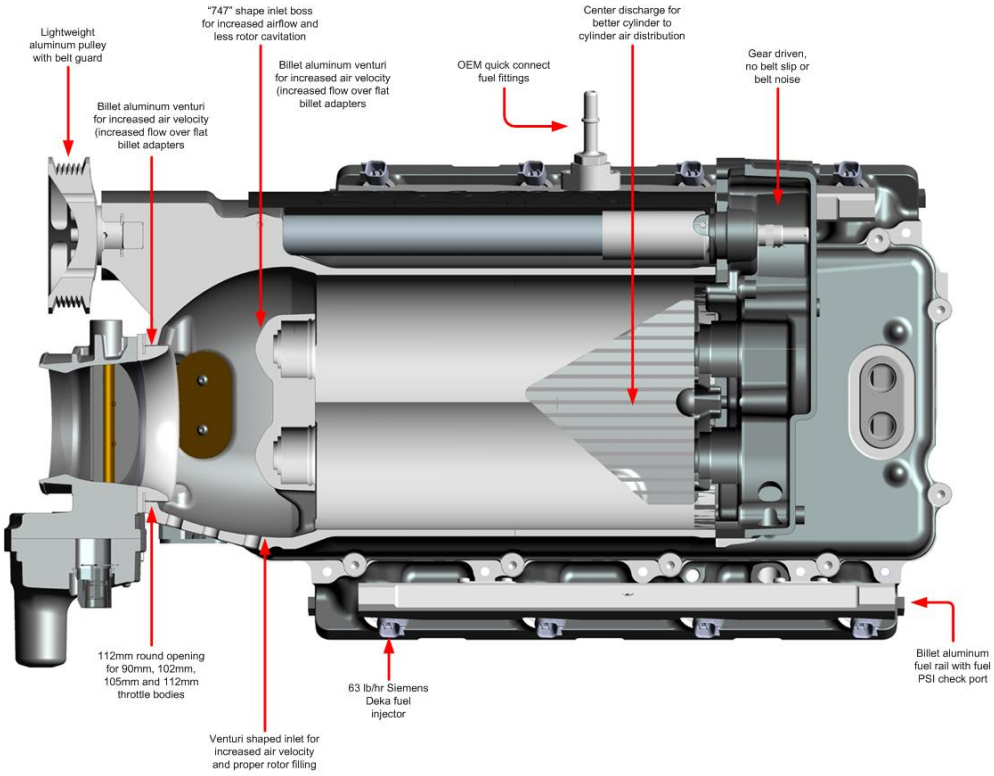
Lightweight aluminum pulley with belt guard
"747" shape inlet boss for increased airflow and less rotor cavitation
Billet aluminum venturi for increased air velocity (increased flow over flat billet adapters
Billet aluminum venturi for increased air velocity (increased flow over flat billet adapters
OEM quick connect fuel fittings
Center discharge for better cylinder to cylinder air distribution
Gear driven, no belt slip or belt noise
112mm round opening for 90mm, 102mm, 105mm and 112mm throttle bodies
Venturi shaped inlet for increased air velocity and proper rotor filling
63 lb/hr Siemens Deka fuel injector
Billet aluminum fuel rail with fuel PSI check port

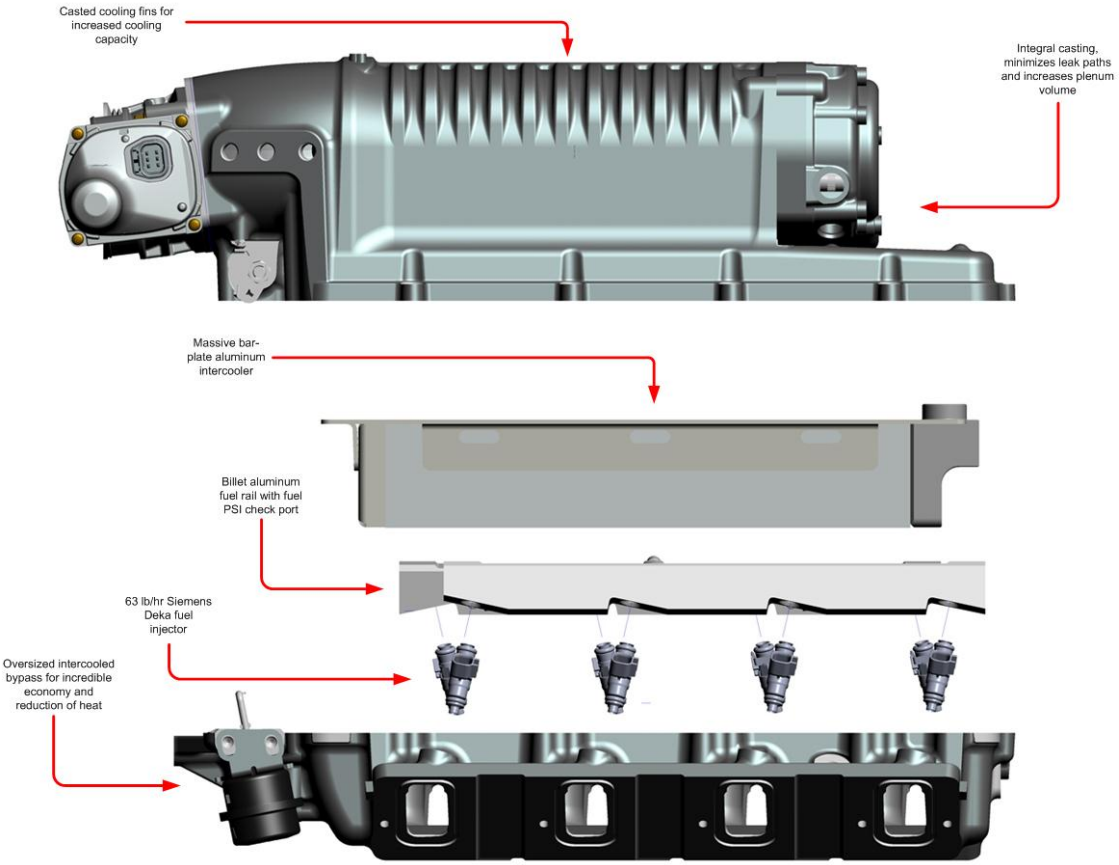
Casted cooling fins for increased cooling capacity
Integral casting, minimizes leak paths and increases plenum volume
Massive bar-plate aluminum intercooler
Billet aluminum fuel rail with fuel PSI check port
63 lb/hr Siemens Deka fuel injector
Oversized intercooled bypass for incredible economy and reduction of heat